CORGHI

# ERCO HC5502
# ERCO HC4502

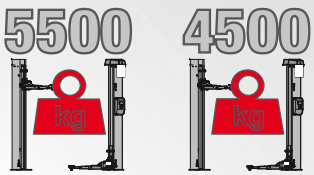


## Electro-hydraulic two post lifts with top connection

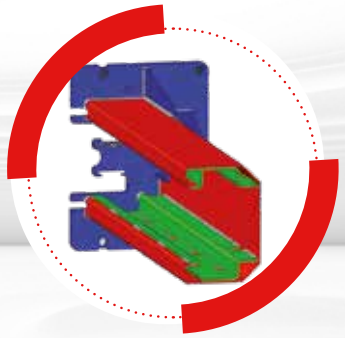

**Internally reinforced column structure** for little bending and internal cable guiding

Four **three-section symmetrical** arms.

**Possibility of installation in symmetrical or asymmetric version.**

# ERCO HC5502 - ERCO HC4502

Realignment of the two carriages using metal cables that guarantee excellent synchronisation. **Standard height of two-post connection: 4,050 mm**.
Available versions (with optional column extension set):
- **V**: Specific for vans (Height of two-post connection: 4,620 mm).
- **XV**: Specific for vans and very high vehicles, extra-high version (Height of two-post connection: 5,220 mm).

## PROTECTIONS

Rubber door protections.
**Toothed sector arm** rotation stop system

## SAFETY

**Electro magnet** safety release **24V**

## INCLUDED ACCESSORIES

Safety stop-bar included as standard.
Two set of extension pads
h= 80 mm and h= 180 mm

## RECOMMENDED ACCESSORIES

**8-43100224 - 8-43100225**
Column extension set

See separate catalogue for further accessories.

## TECHNICAL DATA

| Model | Erco HC5502 | Erco HC4502 |
|---|---|---|
| Lift capacity | **5500 kg** | **4500 kg** |
| Lifting time | **45 s** | |
| Three phase motor | **400/230V - 3kW - 3Ph - 50/60Hz** | |
| Single phase motor | **230V - 3kW - 1Ph - 50/60Hz** | |
| Max. lifting height | **2062 mm** | |
| Max. locking position | **1957 - 2037 mm** | |
| Lift minimum height | **115 mm** | |
| Height connection | **4050/4620/5220 mm** | |

## DIMENSIONS

**ERCO HC4502** **Symmetric Installation**

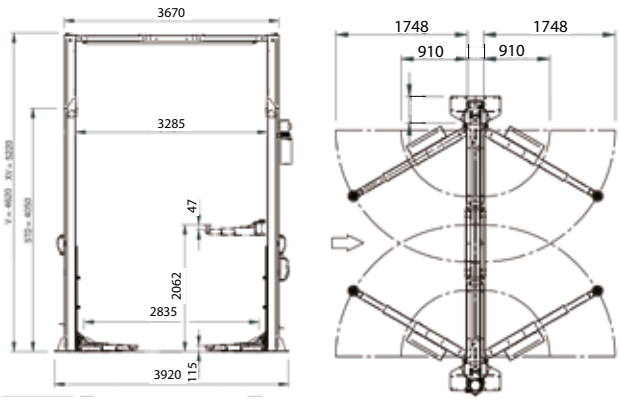


**ERCO HC5502** **Asymmetric Installation**

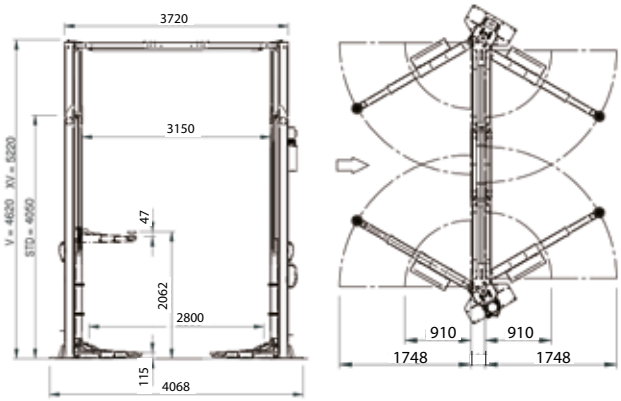


The manufacturer reserves the right to modify the features of its products at any time.