CORGHI

3D wheel aligner
Exact Linear Plus

The wheel aligner for everyone
Fast, precise
and extremely reliable!

Advanced wheel aligner with an optional automatic lift level tracking function to maintain constant alignment during measurement operations.

The components, made from high quality materials, are integrated into a modern, well-thought-out design, designed to ensure reliability and durability.

The software is simple and intuitive to use, allowing wheel alignment measurements to be carried out quickly and accurately, with data display extremely accurate down to 0.01°.

Operation is made even more straightforward thanks to an intuitive two-button operation, supported by an easily accessible tutorial. In addition, the system offers quick access to all setting values, facilitating operator operations.

The sensor **holder** is compatible with rims from 10" to 26", and can also be used with an adapter, thus ensuring great versatility.

EASY TO USE

Simple graphics with Corghi icons.

Simple and efficient, easy to learn,
quick to select.
Ergonomic work surface.

Superior quality camera

Latest generation high-resolution HI-Q camera for machine vision.

Operating light indications thanks to the integrated synoptic panel.
Measurement by image difference. Each acquisition is differentially processed by two consecutive images to eliminate measurement problems in critical sunlight conditions or in the presence of light reflections.

Lightweight target

High-resolution

It can be detached from the clamp and is compatible with all Corghi clamps. Front infrared filter for enhanced immunity to solar reflections.

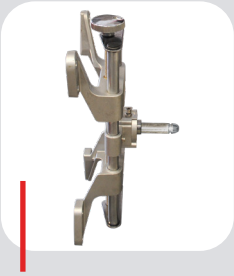

ClampOnTyre

Compatible with the **ClampOnTyre** quick clamps: no contact with the rim, innovative design for fast and reliable clamping. (*)

(*): to use the ClampOnTyre clamps, the SMART-ROC optimised runout kit must be installed.

CLAMPS FROM 10" TO 26"

with adapter (optional)

Main unit

complete with PC holder

and shelf for keyboard and printer

Assistance system

FOR moving the vehicle on the lift

via remote camera for easy positioning
of the vehicle (optional).

New integrated lifting system

with a worm gear and safety system

The camera movement kit allows the operator to work from the pit to a height of more than 2 metres by pressing a key on the keyboard. Quick and easy. Lift level automatic tracking function (upon request) with integrated safety mechanism.

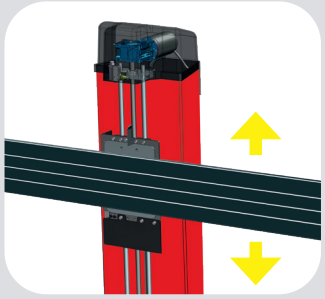

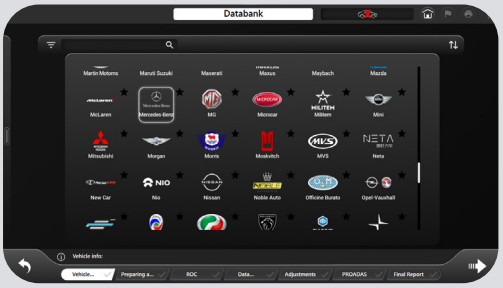

New easy-to-use software

for precise and quick alignment

New modern and professional graphic interface specifically developed for the wheel alignment specialist. Rich with **new features**, such as the lower progress bar, the **convenient** vertical pop-up selection **menu**, and enhanced data visibility in the operating area. It also features **useful quick selection icons** for the most common functions and simple wizards with clear instructions for less experienced operators. The procedure is fully customisable with an always up-to-date and comprehensive database.

- **Multilingual Windows IoT** operating system;
- **User-friendly** procedures;
- Extraordinary international database with more than **84,000 vehicles** included;
- Real-time **graphic indications;**
- **User database** for entering or changing vehicle data;
- **Factory-calibrated**, only calibration verification is required during installation**;**
- Database on **hard disc**;
- **Customer's database** for specific activities, to recall and save all customer data;
- **A.i. intelligent**, algorithm identifies critical angles, suggests corrective actions, and optimizes compensation of non-adjustable elements.

With the **CloudNext** service, the software is always updated to the latest available release.

WHEEL ALIGNER COMPATIBLE WITH PROADAS

The wheel aligner is compatible with the **PROADAS** universal system used for the calibration of driver assistance systems on new generation vehicles.

Using the wheel aligner cameras, the **system for calibrating the camera and radar on board the vehicle can be aligned precisely and quickly.**

Manufacturers recommend calibrating ADAS systems after aligning the vehicle.
For further information, visit the PROADAS product sections on our website.

Recommended accessories

8-34900011
Carrying case with kit for calibration and check

x4

8-34100020
Self-centring 10"-21" clamps

x4

8-34100021
26" extender kit for clamps

8-33100204
Pair of turntables with pair of pads, suitable for SMART-ROC procedure

8-34900072
Aligner Trolley. To use the wheel aligner in different lifts or in drive thru mode.

8-21120005
A4 Inkjet Printer

For more information please refer to the complete accessory catalogue

TECHNICAL DATA	
Total toe	± 20°
Individual toe	± 10°
Camber	± 10°
Caster	± 30°
Kingpin	± 30°
Setback	± 22°
Thrust angle	± 10°
Steering angle difference	± 20°

Equipment

Overall dimensions

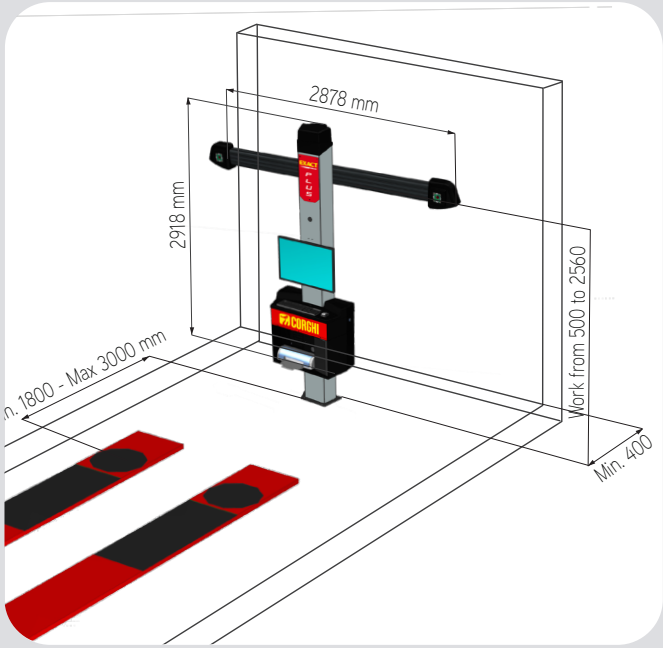

TECHNICAL DATA	
Power supply voltage	115/230Vac - 50/60Hz - 1 Ph
Power consumption	500 W
PC holder	11 kg
Camera arm	26 kg
Pole	66 kg
Total camera resolution	2× (3088 × 2064) = 12.7 MP

The manufacturer reserves the right to modify the features of its products at any time.

CORGHI
www.corghi.com

CORGHI is a brand of the NEXION SpA Group
Via Strada Statale 468, 9 - 42015 Correggio (RE) - Italy | +39 0522 639111 | info@corghi.com

TOLL-FREE SERVICE NUMBER - ITALY: + 39 800 203738

Cód. DPCG001638_06_2026